DATE	SYM	REVISION	AUTH	CHK
10/21/98	C	REDRAWN IN CAD	BLO	W.P.
8/26/99	D	REV. INSPECT. PORT & MU	BLO	J.F.
3/13/02	E	REV. MAKE-UP SHAPE	BLO	G.D.
9/20/06	F	ADD MAKE-UP BAFFLE	KF	JBH
11/14/08	G	ADDED BLOWER HOOD	KF	JBH

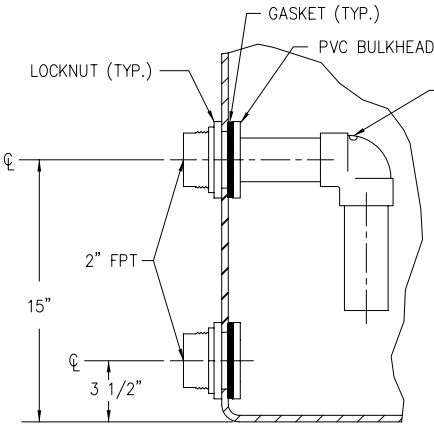

VIEW: 315°
OVERFLOW & DRAIN CONN.
NTS

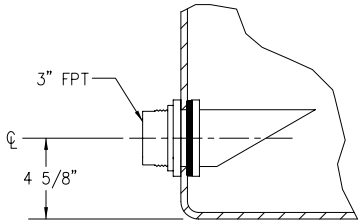

VIEW: 270°
OUTLET/VORTEX BRK. CONN.
NTS

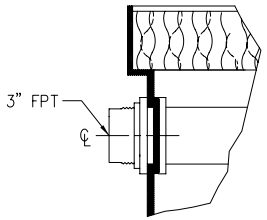

VIEW: 180°
INLET CONN.
NTS

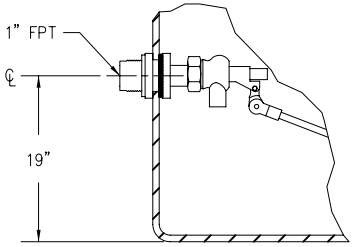

VIEW: 45°
MAKE-UP VALVE CONNECTION
NTS

VIEW SHOWN WITH ITEM 3 (MIST ELIMINATOR) AND ITEM 5 (FILL) REMOVED

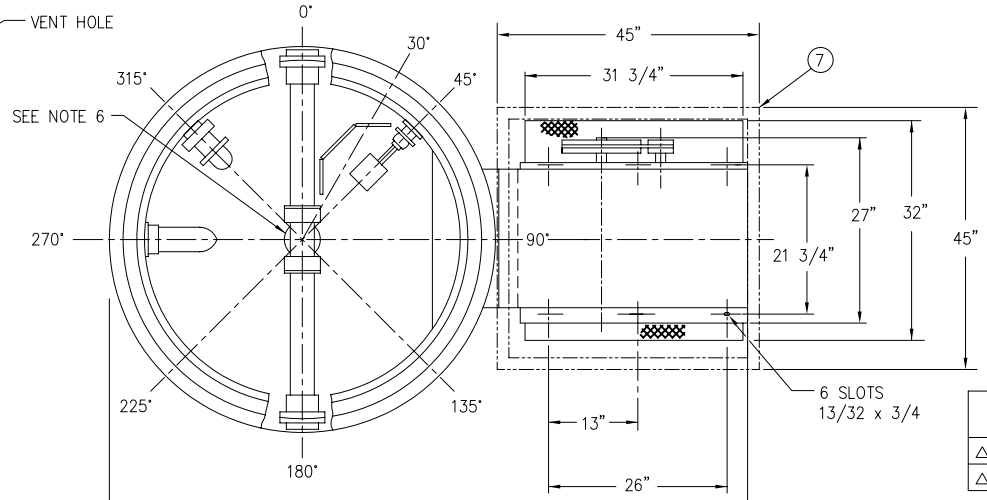

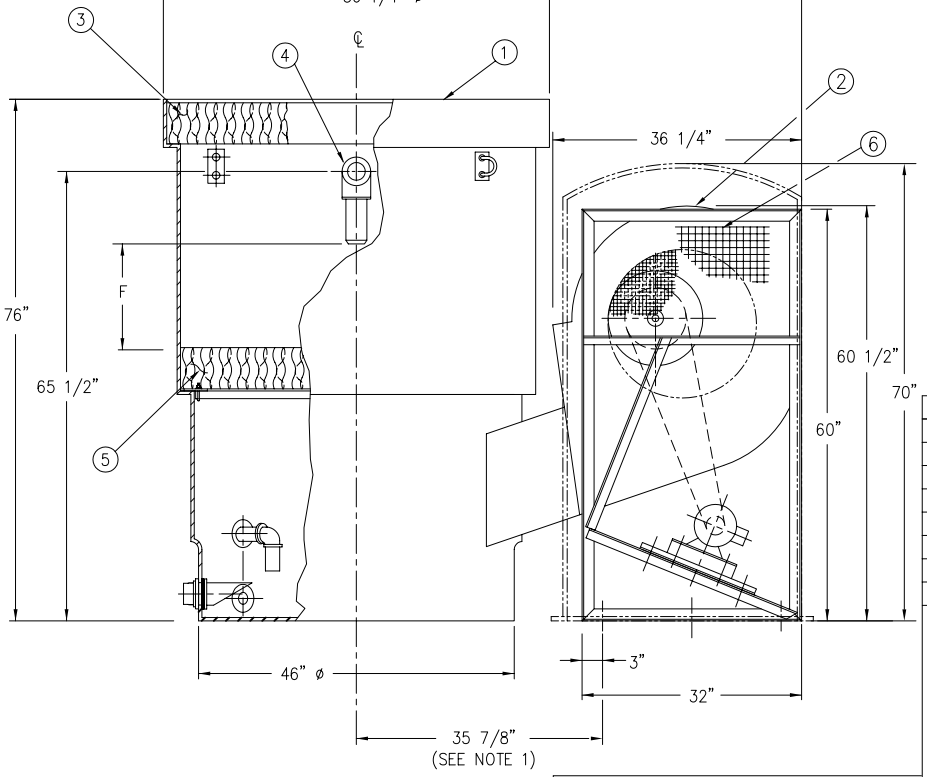

NOTES:

1. DIMENSIONS SHOWN ARE NOMINAL AND ARE SUBJECT TO FABRICATION TOLERANCES.
2. TOWER TO BE INSTALLED ON A FLAT AND RIGID SURFACE, PROPERLY SUPPORTED.
3. EXTERNAL PIPING MUST BE INDEPENDENTLY SUPPORTED.
4. PIPING & BULKHEAD FITTING MATERIAL IS PVC.
5. HARDWARE MATERIAL IS TYPE 304 STAINLESS STEEL.
6. BOTTOM OUTLET IS OPTIONAL IN LIEU OF SIDE OUTLET AND INSTALLED AT CENTER OF TOWER BOTTOM.

UNIT	F	FILL	MOTOR HP	DRY WT. LBS.	OPER. WT. LBS.	SUMP CAPACITY
ΔT 30	9 3/4	6"	5	710	1,500	75 GAL.
ΔT 40	9 3/4	12"	5	730	1,525	

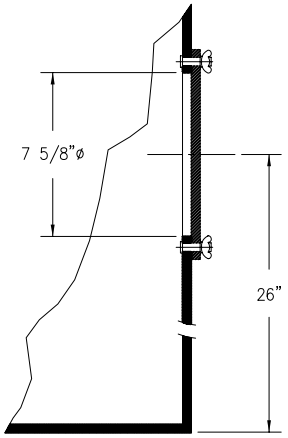

VIEW: 30°
INSPECTION PORTHOLE
NTS

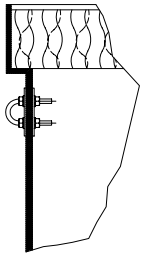

VIEW: 225°
HOLD DOWN BRACKET
(4) @ 90°
NTS

ITEM	QTY	PART NO.	DESCRIPTION	MATERIAL	REMARKS
7	1		BLOWER HOOD (OPTIONAL)	POLYETHYLENE	
6	1		FAN GUARD	PVC COATED STEEL	
5	1		FILL	PVC	
4	1		SPRAY TREE ASSEMBLY	PVC	
3	1		MIST ELIMINATOR	PVC	
2	1		BLOWER ASSEMBLY	COATED STEEL	
1	1		TOWER SHELL	POLYETHYLENE	

BILL OF MATERIALS

INFORMATION CONTAINED HEREIN IS SUBJECT TO CHANGE WITHOUT NOTICE IN THE INTEREST OF PRODUCT IMPROVEMENT.

PIONEER®

DELTA COOLING TOWERS, INC.
41 PINE STREET, ROCKAWAY, NJ 07866
PH 973.586.2201 FAX 973.586.2243

TITLE ΔT 30-40 ASSEMBLY

DWN BY Bonnie L. Oddo
APPVD BY W.A. Patterson
JOB#
SCALE 3/4" = 1'-0"
DATE 10/21/98
DWG NO. DT-C-78-200